HPB

HIGH PERFORMANCE BUSBARS



TABLE OF CONTENTS

CORE COMPETENCIES	4
HIGH PERFORMANCE BUSBARS	6
INSULATED CONDUCTORS	8
SERVICES OF HPB	10
WIRE FORMING PARTS FOR E-MOBILITY	12
HV BUSBARS FOR ELECTRICAL POWER DISTRIBUTION	14
FAST CHARGING	16
BRANDGROUP	18
HPW	20
CONTACT	22

HPB

HIGH PERFORMANCE BUSBARS

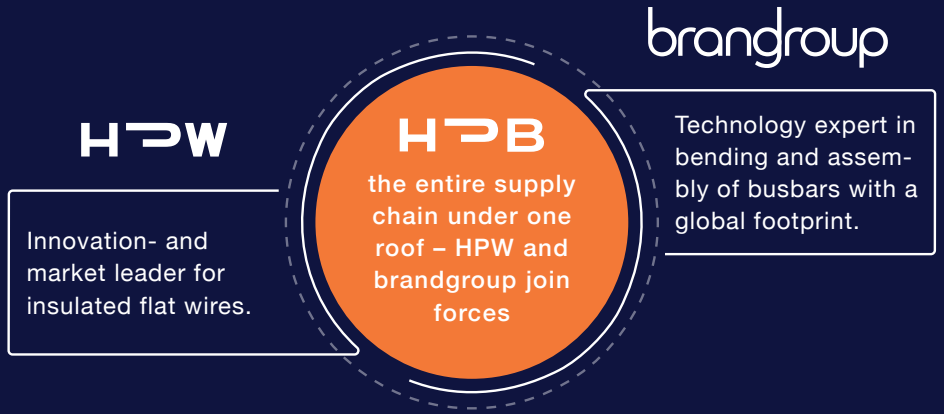

CORE COMPETENCIES:

- Production of insulated aluminum and copper busbars
- Wire cross sections up to 400mm²
- 3D-busbar bending and component assembling
- Global footprint with production sites in EU / CN / MX

HPB – a joint venture between brandgroup and HPW



HPB BUSBARS

HPB manufactures customer-specific dimensions up to a cross section of 400 mm² in a fully automated process that covers the entire value chain from the primary metal out of aluminum or copper to the finished, insulated flat conductor.

These busbars fulfill the increasing demand of tightest bending radii and they withstand electrical and mechanical stress caused during bending operation and in the final application. Typical requirements in the industry such as weight reduction, bending radii and temperature resistance of the insulation (“Thermal Runaway”) are addressed by developing new materials together with leading customers as well as in international research projects.

INSULATED CONDUCTORS

- Insulation material PA12, PPS and PEEK
- Excellent adhesion on copper and aluminum conductor surface
- No bonding layer between conductor and insulation
- Custom labeling available



MICRO SECTION



Al | 36.00 x 8.00 | 600µm



Cu | 28.00 x 6.00 | 500µm

SURFACE	even, closed
WIDTH OF CONDUCTOR	max. 50 mm
THICKNESS OF CONDUCTOR	max. 8 mm
INSULATION INCREASE	0.25 – 1 mm
TENSILE STRENGTH (CU)	200 – 270 N/mm²
TENSILE STRENGTH (AL)	60 – 95 N/mm²
ELONGATION (CU)	≥ 32%
ELONGATION (AL)	≥ 25%
SPRINGBACK ANGLE (CU)	≤ 6.0°
SPRINGBACK ANGLE (AL)W	≤ 6.0°
COLOR	RAL 2003 – RAL 2008

SERVICES OF HPB



OXYGEN FREE COPPER ROD

- usage of recycled cathodes
- rod diameter 8 - 16 mm
- survace shaving
- drawing (min 2,25mm)



BARE CONDUCTOR MATERIALS

- Al alloy group 1xxx series
- Al precipitation-hardened 6xxx series
- Al alloys (e.g. AlZr)
- CuETP
- CuOF

INSULATED MATERIALS

- PA12 (Polyamide 12)
- PPS (Polyphenylene Sulfide)
- PEEK (Polyether Ether Ketone)



SEMI-FINISHED PRODUCT

- Flat wire on spool, bare or insulated
- Spool weight up to 2 tons (Cu)
- Maximum dimensions of bare wire: 50 x 8mm (400mm^2)



PROCESSING

- Cutting, stripping, and bending according to customer specification
- Processing of materials provided by the customer
- Joining and welding of single components
- Assembly of busbar components

WIRE FORMING PARTS FOR E-MOBILITY

Our custom busbars made of aluminum and copper are used in various electronic fields.
Special machines are used for the production and shaping of the wire according to the customer‘s requirements. The bending material can be made of different metals like copper or aluminum. Depending on the application, however, the parts can also be further refined.

YOUR PARTNER FOR INDIVIDUAL BUSBAR SOLUTIONS

- **Flexible:** Production of customized parts, prototypes and assemblies for e-mobility
- **Fast:** Production of all common insulated copper and aluminium wires possible
- **Reliable:** Equipped with an integrated system for mechanical stripping

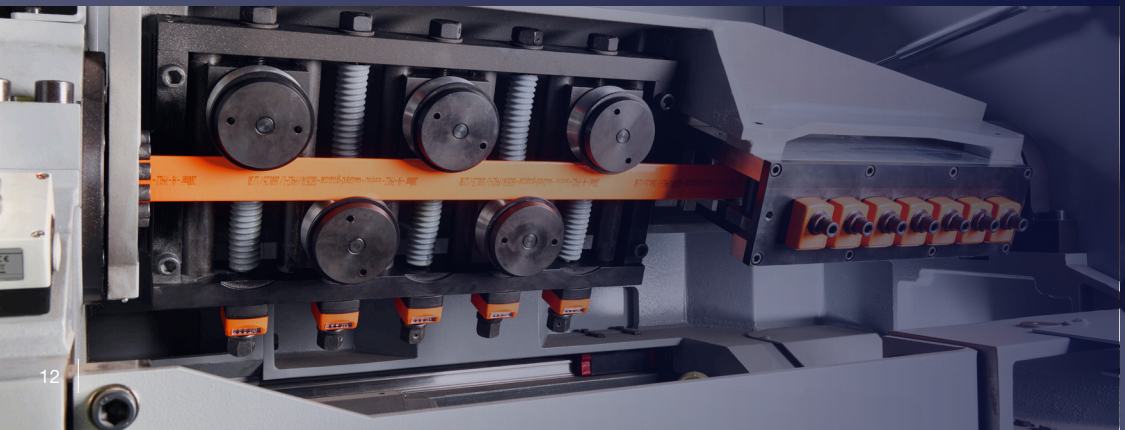



HV BUSBARS FOR ELECTRICAL POWER DISTRIBUTION

We design and manufacture insulated copper and aluminum busbars for electrical power distribution applications. Using high-precision CNC bending technologies, we produce rigid busbars with cross-sections of up to 400 mm², ensuring maximum accuracy, repeatability, and consistent quality.

In addition to mechanical manufacturing, we offer component assembly as well as welding of flexible elements and terminals.

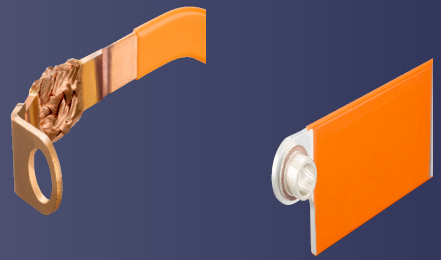

Various welding and connection technologies are applied, carefully selected to match the material, application, and specific customer requirements.

OUR SOLUTIONS STAND FOR:

- High electrical and mechanical reliability
- Precision manufacturing with tight tolerances
- Flexible, customer-specific designs
- Efficient and safe power distribution

HIGH PERFORMANCE BUSBARS

Your partner for high-performance HV busbar solutions.

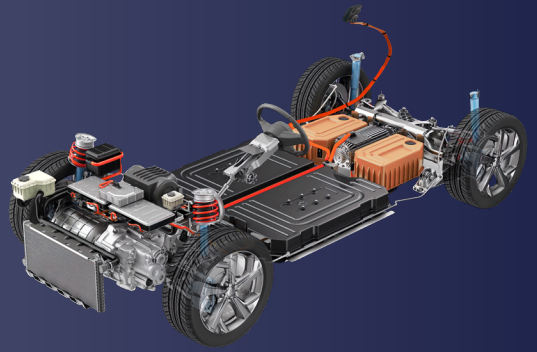

FAST CHARGING IS A MILESTONE OF FUTURE ELECTROMOBILITY, REQUIRING DC CURRENTS OF 800 AMPS AND BEYOND.

To meet these demands, we rely on aluminum DC busbars. Compared to round copper cables of a similar cross-section, these flat conductors significantly reduce overall height, allow seamless integration into modern vehicle architectures.

Furthermore, the larger surface area of rectangular busbars dissipates heat much more efficiently than round cables. Due to their structural stability, rigid busbars are also better suited for automated assembly, making them the preferred choice for high-volume production.

Utilizing flexible manufacturing systems, we produce complex 3D-bent busbars from pre-insulated aluminum or copper. We customize cross-sections, insulation, and geometries to meet specific customer requirements.

	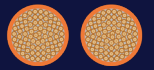 ROUND FLEXIBLE CABLE	 FLAT RIGID BUSBAR
PASSIVE COOLING BY HEAT DISSIPATION	-	+++
AUTOMATED PRODUCTION	--	+
BENDABILITY	++	+
CONTACTING	+	-
INSTALLATION SPACE	--	+
ELECTROMAGNETIC COMPATIBILITY (EMC)	--	++
WEIGHT SAVING	--	++
COST	--	++
CONDUCTOR MATERIAL	Al, Cu	Al, Cu

JOINT VENTURE PARTNER: BRANDGROUP

The brandgroup is a german family-owned company. It develops and manufactures innovative and efficient springs, spring assemblies and wire forming parts for its customers.

The products make an important contribution in the automotive supply industry, the construction industry and other industrial applications.
The brandgroup has several production facilities both inside and outside the EU.

Putting brandgroup´s long-standing expertise in the wire forming of springs, assemblies and bending components to new use, it now offers hairpins, I-Pins and axial flux motor coils for EVs.

FACTS & FIGURES

FOUNDED:
Wilhelm Brand KG in 1922 in Lippstadt/ Germany

LOCATIONS:
Anröchte, Germany (Headquarters)
Siemianowice, Poland
Taicang, China
Querétaro, Mexico

BUSINESS SEGMENTS:
Automotive industry
Construction industry
Home appliance industry
Further industries

CERTIFICATES:
ISO 5001
ISO 9001
ISO 14001
IATF 16949



JOINT VENTURE PARTNER: HPW

HPW is a renowned supplier of flat copper and aluminum wires, playing a decisive role in the global energy transition.

The company is primarily serving the electromobility and renewable energy sectors. Additionally, HPW operates its own melting plants for oxygen free copper rod as well as for Nickel based alloys.

In response to the growing demand, particularly in electromobility, HPW continues to expand its operations.

FACTS & FIGURES

FOUNDED:
1946 (as Gebauer & Griller Metallwerk)

LOCATIONS:
Linz, Austria (Headquarters)
Garsten, Austria
Leonding, Austria
planned site in the USA

BUSINESS SEGMENTS:
Copper Rod
E-mobility
Energy & Drives
Industry

CERTIFICATES:
ISO 9001
ISO 14001
IATF 16949



CONTACT

SALES MANAGER WIRE



THOMAS KLINGER
t.klinger@hpbusbars.com
+43 (0) 664 82 49 832

SALES MANAGER BUSBARS



RALPH OBERBIERMANN
r.oberbiermann@hpbusbars.com
+49 (0) 151 463 195 75

SALES MANAGER ASIA



SHUICHI KAWAMURA
s.kawamura@hpbusbars.com
+81 (0) 90 618 471 61

SALES MANAGER NORTH AMERICA



PHANI KALAPALA
p.kalapala@hpbusbars.com
+1 (248) 912 48 12

TECHNICAL SALES MANAGER



JÖRG RUHOSE
j.ruhose@hpbusbars.com
+49 (0) 172 319 613 5

HPB – a joint venture between brangroup and HPW

www.hpbusbars.com

in hpbusbars